N.Z. Short-wave Club.

FOLLOWING the report last week that a short-wave club is being formed in Wellington, a number of enquiries have been received. All who would like to join this organisation for the mutual benefit of all short-wave listeners are invited to send along any suggestions they care to make, which will be discussed at a meeting to be held soon. Address letters to Mr. A. B. McDonagh, 274 Cuba Street, Wellington, or to Mr. F. W. Sellens, 7 Randwick Road, Northland, Wellington.

Notes and News.

Radio Club of Brazil.

ANOTHER short-wave station to be logged is at Rio de Janiero (Brazil) on 31.75 metres. Transmissions are made daily between 10 a.m. and noon, New Zealand summer time. The station is operated by the Radio Club of Brazil.

Short-wave Stations at Saigon.

BESIDE the short-wave station F8, ICD, better known as "Radio Saigon," on 49 metres, there are two other stations at Saigon. One is the Government owned and operated station working on 24.91 metres for telegraph and telephone working with Paris and Japan. The other is privately owned, working on 31.30 metres with an aerial power of 800 watts.

IAY, Piacenza, Italy.

A CORRESPONDENT in an Australian radio magazine suggests that the station heard each morning on about 45 metres is IAY, Piacenza, Italy, wavelength 45 metres." The description of reception agrees as regards volume, items, and time with what the writer has reported upon during the past few weeks. At 6.30 a.m. on Friday, just after a musical item, talk was heard, part of which I interpreted as "Radio Paralinza." This fits in very well with "Radio Piacenza," Italian pronunciation accounting for the difference. The only record I can find of this station is in the "Radio Amateur Call Book Magazine," which gives the following: 1AY—P. Fontana, Corso, Garibaldi, 34, Piacenza.

7LO, Nairobi.

THE station on the same wave-length as W9XAA has proved to be 7LO Nairobi. When last identified on this band they were a little higher—about 49.9 metres. "Nairobi calling" was heard on Wednesday morning, when reception was a trifle better than usual.

Log for Week ending January 24.

RV15, Siberia, 70.1 metres. — Good volume each evening. Some fine music later.

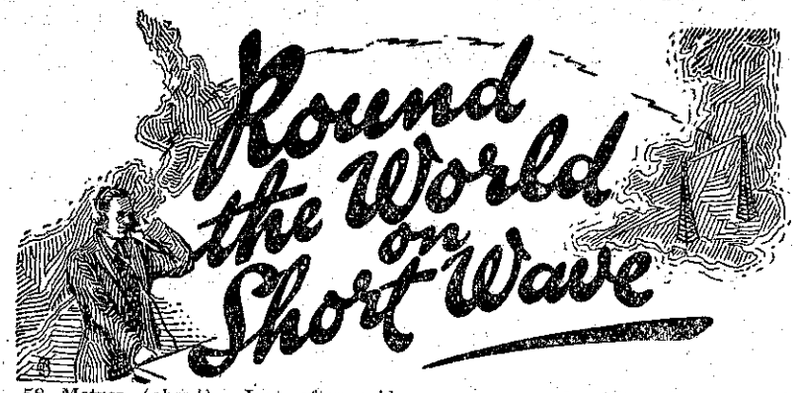

58 Metres (about).—Just after midnight on Saturday music and talk were heard at R8-9. A Morse station on top spoilt reception.

49.8 Metres (about). — An American station, possibly W9XF, R7; static very bad.

W9XF, Chicago, 49.83 metres.—Still good volume after 5 p.m.

PK3AN, Java, 49.70 metres.—From midnight Saturday R7 static very bad.

7LO, Nairobi, 49.4 metres (about).—Each morning from 6 a.m. Wednesday was the clearest and loudest for some time, being about R7 with slight rapid fade and some static. At 6.23 a.m. a Brunswick record, with number given was announced. After 6 pips (time signal) at 6.30 a.m., reports were asked for and something was said about a conference, possibly the Indian Round Table Conference, as this was the morning the British Prime Minister was to have spoken. Afterwards a programme was outlined with news and shipping. Then "This is —— Nairobi calling. From our studio the Rev. ——." The above was about 25 per cent. readable—a word here and there only, being understood. On Friday, Big Ben was just audible at 7 a.m. from 7LO.

W3XAL, Boundbrook, N.J. 49.18 metres.—Maximum volume from 5 p.m. till 6 p.m. each evening.

W2XE, New York, 49.02 metres.—Sunday reached R5 by 5.30 p.m. Very noisy backgrond.,

Radio Saigon, Indo-China, 49 metres.—Heard Tuesday and Saturday from 11.30 p.m.. Volume is wondeful, quality very good.

W8XK, Pittsburgh, 48.86 metres.—Sunday, R5 at 5 p.m. increasing to R6, with messages for residents in the Arctic Circle.

KIXR, Manila, 48.86 metres.—Only heard on Thursday this week, when they were R7 at 10 p.m., spoilt by morse interference and static.

HRB, Honduras, 48.62 metres.—Sunday, best at 5 p.m. when R7 with orchestra, but very unsteady.

CT3AG, Funchal, Madeira, 47 metres.—Saturday, 6.20 a.m., R7 with slow fade. All foreign talk.

Radio Piacenza, Italy, 45 metres.—Very good volume each morning. Friday was the best yet. R9 at 6.20 a.m. with music and talk. Close at 6.30 a.m. till 7 a.m., when they are about R5. A meeting was relayed after 7 a.m. when cheers could be heard at intervals.

VK3ME, Melbourne, 31.55 metres.—Saturday from just after 10 p.m. Excellent volume and quality with a test programme.

W2XAF, Schenectady, 31.48 metres.—Sunday and Saturday. Best at 4 p.m. when signing off, but only R5 and gushy each day.

Zoesen, Germany, 31.38 metres.—Weak and gushy each morning except Wednesday, when they were inaudible.

WIXAZ, Springfield, Mass.—Only R2 at 4.30 p.m. on Sunday. Saturday night starts at 12.30 a.m. (Sunday morning) R5, very gushy with static.

PCJ, Holland, 31.28 metres.—Thursday and Friday mornings just audible at best. Saturday R4 only during the morning session. During the afternoon from R1 at 2.30 p.m. they increased to R7-8 at 4 p.m. with a programme for U.S.A., Canada, etc. They then closed down for an hour. From 5 p.m. till 6 p.m. they were excellent at R9. the best for some weeks, with a special programme for Australia, New Zealand, and Tasmania.

LSX, Buenos Aires, 28.9 metres.—This station has gone off badly, not reaching more than R5 and usually gushy as well.

G5SW, Chelmsford, 25.53 metres.—Very rapid fade each morning, and, except Friday, very weak.

12RO, Rome, 25.50 metres.—Thursday morning after 6.30 o'clock good at R8. Other mornings poor.

W8XK, Pittsburgh, 25.25 metres.—Is weak early, but increases in volume by 7.30 a.m.

FTN, Paris, 24.46 metres. — Duplex with Rabat after 10 p.m. at good volume.

The "Night Hawk"

Continued from page 17

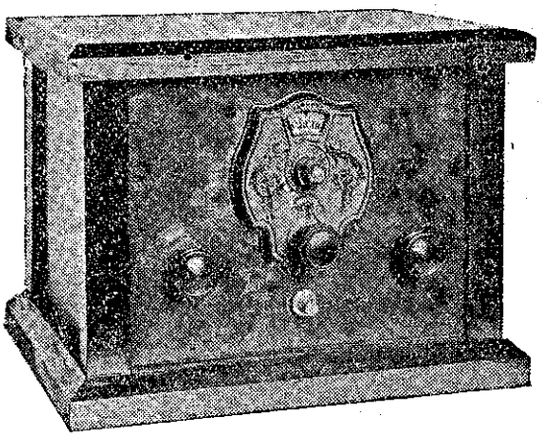

whatever winding jig happens to be available. Thread the 28-gauge dsc. wire through the first hole and then wind the entire length of the marked former. Go right over the holes and the separating spaces and finish off through the top hole. Remove from the winder, and after securing the ends, cut the wire between the two lowest coils, L2 and L3, and holding the finger over L3 end wind off enough of L2 until the hole comes into full view. Then pass the wire through. Do the same for the top of L3, and then repeat the whole performance for L2 and L1.

Melt the solder from the pins of the valve base, and having cleared away the insulation from the portions of the coil ends that will touch the pins, pass the wires through and push the valve base into position. When all the wires are drawn tight solder them to the ends and round off with a file. The brass brad can then be driven home. The particulars of the short-wave coils were given last week.

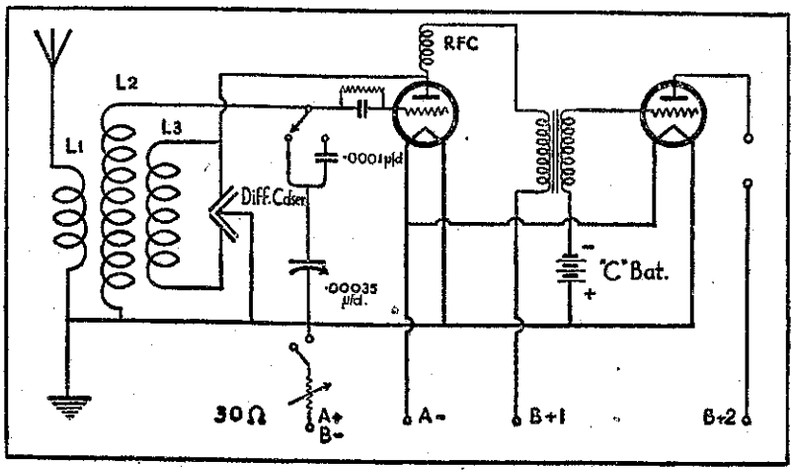

METRO *MANTEL RADIO*

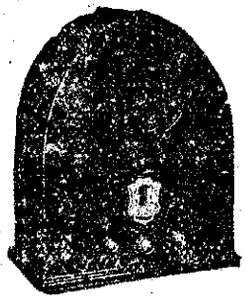

A Quality Radio in small space. Write for full details.

R. H. Co., 553 olombo St., Christchurch

THE NIGHT HAWK

Kit Set with Valves	£5	5	0
With B.C. or S.W. Coils only	£5	0	0
Differential Condensers		8	0
Coils, complete set		17	6
"Wavemaster" .00035 Condenser		6	0
Valve Holders, Pilot UX ..		2	0
Valve Holders, Pilot UY ..		2	3
"Pep Punch" 3½ to 1 Transformer		10	0
Panel Ebonite 6 x 8.....		2	6

We Pay Postage.

— THE —

C.A.S.

(Country Accessories Supply)

29 VENTNOR STREET, SEATOUN, WELLINGTON.